PARKING BRAKES

CONTENTS

GENERAL INFORMATION 2

SERVICE SPECIFICATIONS 2

LUBRICANTS 2

ON-VEHICLE SERVICE 3

Parking Brake Lever Stroke Check and Adjustment 3

Parking Brake Switch Check 3

PARKING BRAKE LEVER 4

PARKING BRAKE CABLE 5

GENERAL INFORMATION

The parking brake is of a mechanical control type acting on the rear wheels. A lever is used to apply the parking brake.

CONSTRUCTION DIAGRAM

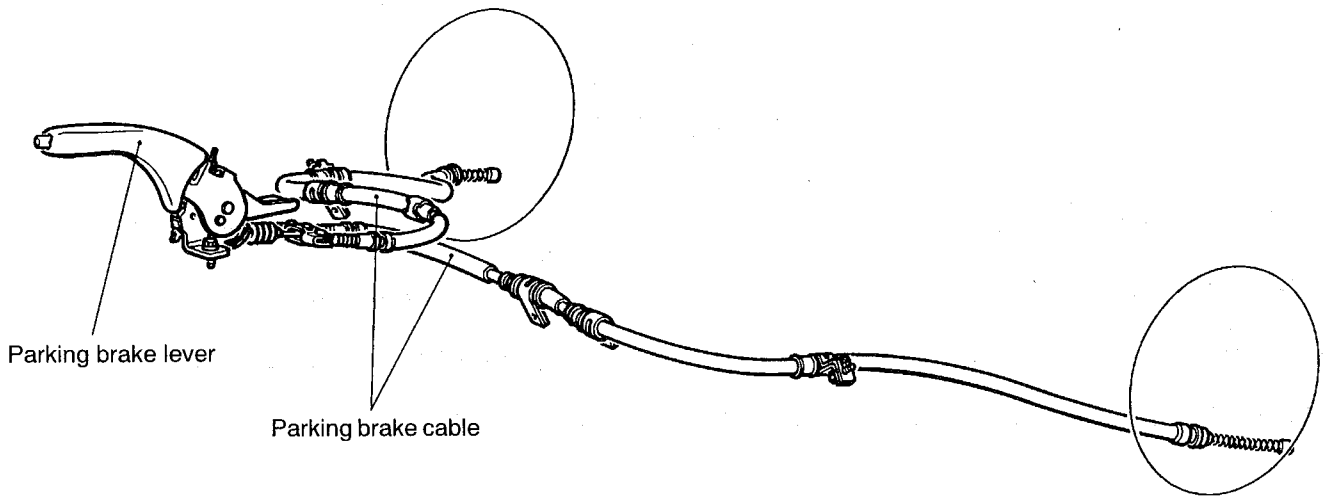

AW0051AL

SERVICE SPECIFICATIONS

Items	Standard value	Limit
Parking brake lever stroke	5 – 7 notches	–
Rear brake lining thickness mm	4.9	1.0
Rear drum inside diameter mm	228.6	230.6

LUBRICANTS

Items	Specified lubricants
Backing plate	Multipurpose grease
Shoe and lining assembly	
Adjuster	

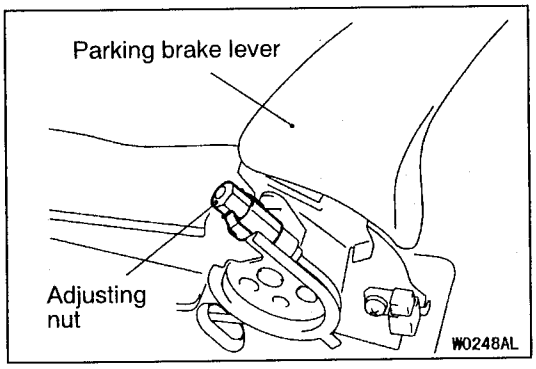

ON-VEHICLE SERVICE

PARKING BRAKE LEVER STROKE CHECK AND ADJUSTMENT

LEVER STROKE CHECK (WITH FORCE OF 196 N APPLIED)

Standard value: 5 – 7 notches

LEVER STROKE ADJUSTMENT

1. Loosen the adjusting nut up to the cable end to free the cable.
2. Depress the brake pedal repeatedly until the lever has no change in its stroke.

   NOTE
   Depressing the brake pedal repeatedly adjusts shoe clearance correctly.
3. Adjust the parking brake lever stroke. Then, jack up the vehicle in its rear. Release the parking brake and rotate the rear tyres to check that no drag exists.

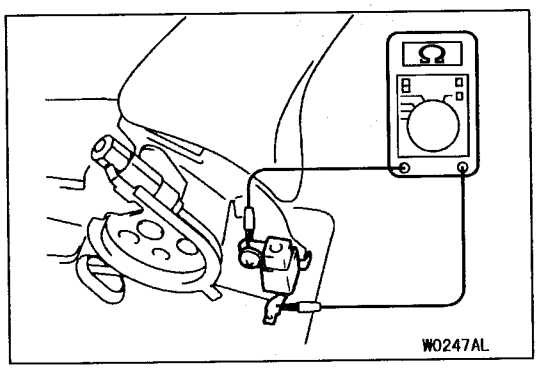

PARKING BRAKE SWITCH CHECK

Check continuity status between the parking brake switch terminal and the switch mounting bolt.

Parking brake pulled	Conductive
Parking brake released	Not conductive

PARKING BRAKE LEVER

REMOVAL AND INSTALLATION

Pre-removal Operation
Rear Floor Console Removal
(Refer to GROUP 52A.)

Post-installation Operation
- Parking Brake Lever Stroke Adjustment (Refer to P.36-3.)
- Rear Floor Console Installation (Refer to GROUP 52A.)

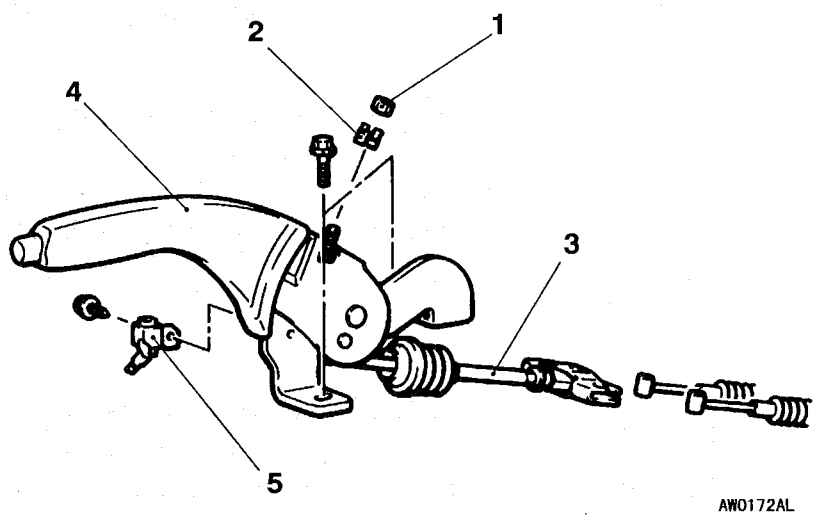

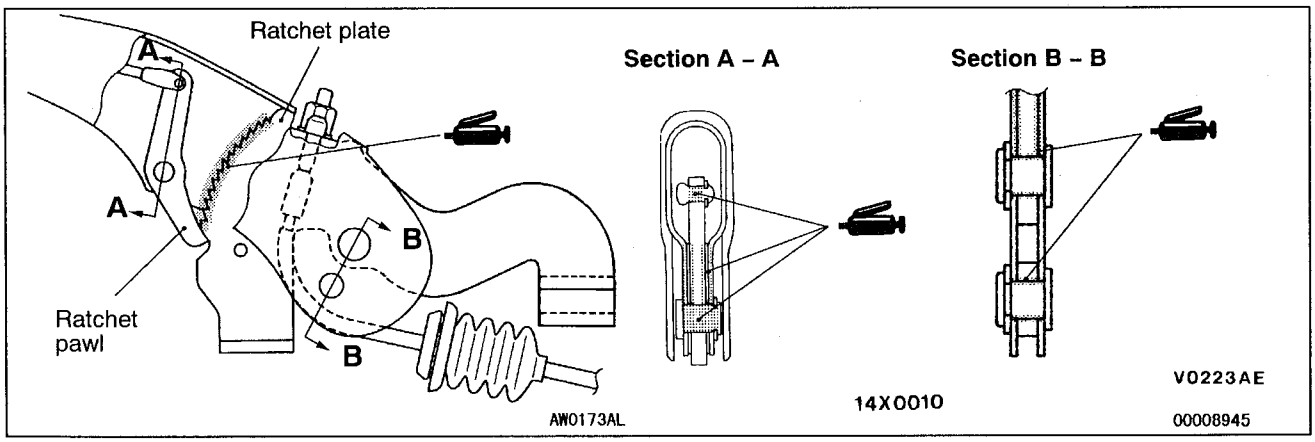

Removal steps
1. Adjusting nut
2. Nut holder
3. Parking brake front cable assembly connection
4. Parking brake lever assembly
5. Parking brake switch

PARKING BRAKE CABLE

REMOVAL AND INSTALLATION

Pre-removal Operation
Rear Floor Console Removal
(Refer to GROUP 52A.)

Post-installation Operation
- Parking Brake Lever Stroke Check
  (Refer to P.36-3.)
- Rear Floor Console Installation
  (Refer to GROUP 52A.)

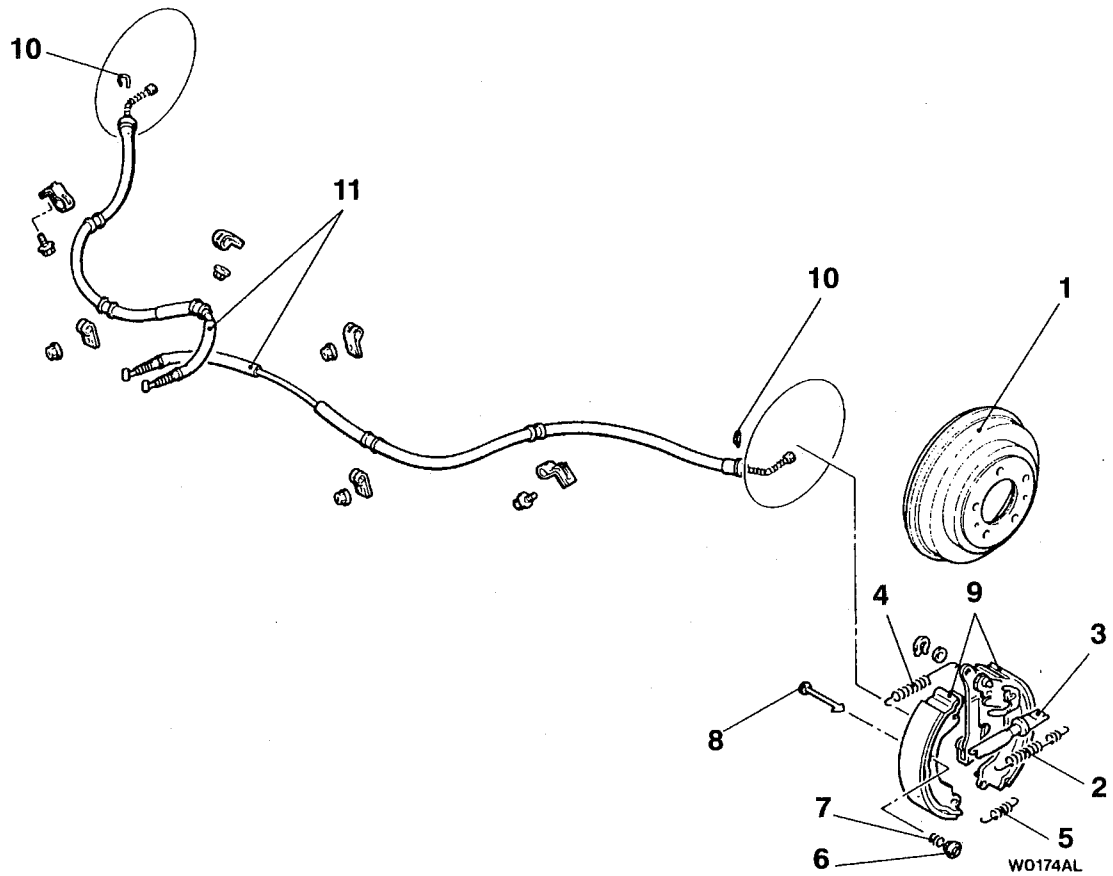

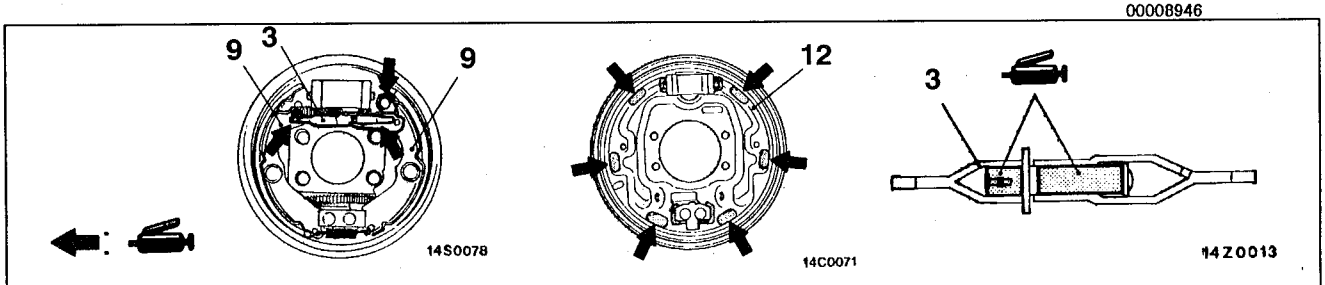

Brake grease: Multipurpose grease

Removal steps

1. Brake drum
2. Shoe-to-lever spring
3. Auto-adjuster assembly
4. Shoe-to-shoe spring
5. Retainer spring
6. Shoe hold-down cup
7. Shoe hold-down spring
8. Shoe hold-down pin
9. Shoe and lining assembly
10. Clip
11. Parking brake cable
12. Backing plate

NOTES